tayco®

Accessories Pricebook

Supply Ontario VOR
Tender #20820

August 2026

Contents

Caution 3
Echo Privacy Screens 4
- L Shape Partial Depth Privacy Screen 4
- L Shape Full Depth Privacy Screen 6
- U Shape Partial Depth Privacy Screen 7
- U Shape Full Depth Privacy Screen 8
- Straight Run Privacy Screen 9
- Clamp Mount Screens 10

Echo Modesty Screens 11
- Modesty Partial Wrap/ integrated L Shape 11
- Modesty Full Wrap/ integrated U Shape 12
- Modesty Straight 14

Echo Freestanding Privacy Divider 15
Floor Screen 16
Echo Surface Mount Privacy Median Screen 18
Echo Under Surface Mounted Bag Drop 19
Echo Under Surface Mounted Wire Manager 20
Echo Wall Tiles 21
- Kite 21
- 3D Kite 22
- Circle Square 23
- Circle 24

Echo Hanging Tackboards 25
Hanging Tackboard Without Whiteboard 26
Echo Whiteboard 27
Echo Mobile Screens 28
- /w whiteboard mount 28
- /wo whiteboard mount 29

Echo Wall Mounted Tackboard 30
Pencil Drawer 32
Task Light 33
LED tasklight 34
Monitor arm 35
Storage cube 36
Horizontal wire manager 37
Vertical wire manager 38
Keyboard tray 39
wall mounted tackboard 40
- grade 1 fabric 41
- grade 2 fabric 42
- grade 3 fabric 43

Power/USB 44
- Ridge Power Module 45

Flex Cable Organizer 46
grommet covers 47
Lock and Key 48

Caution

Load Bottom Drawer First

- Operate one drawer at a time
- Units may tip if loaded incorrectly
- Units should be attached to a wall or other furniture to reduce tipping hazard
- Always load the heaviest files in the bottom drawer

Heavy Load

- Some products must be anchored to wall to ensure stability & safety.
- It is the owner and installers responsibility to ensure that the wall type and construction is of sufficient strength to carry the loads of any wall mounted products and their contents.
- Failure of the wall and anchors to support all imposed loads may result in property damage and/or personal injury.
- Tayco can provide size and empty weight of its products only. As wall blocking is considered a building construction process, Tayco cannot provide recommendations in this respect and cannot be responsible for damage or injury that may occur as a result of improper installation and/or blocking.

Instability Hazard

Mobile items on casters such as flip top, personal and movable tables of any type and storage items of any type may present an instability hazard if not secured correctly while in use or in storage. Flip top tables or training tables of any type, are inherently more unstable when folded. Tayco provides the following guidelines & warnings when using mobile products:

- Lock casters immediately after moving. Do not leave the casters unlocked when in use or in storage.
- Motion may increase the instability of any item with casters. If the wheels hit an obstruction the table's forward momentum often causes overturn, especially if the item is not equipped with wheel extensions. Exercise strong caution while moving these items.
- Use caution when abrupt level changes in the floor are present (such as a doorway or room threshold) as caster failure or tipping may result.
- Do not stand, sit or lean on mobile items for support. They are not intended for this use and personal injury or property damage may result.
- Mobile units that feature height adjustable elements must be lowered to the minimum compressed height when moving to prevent instability. It is also recommended the user remove all computer equipment or other accessories to prevent possible weight imbalance or damage to equipment.
- Failure to follow the guidelines above may result in property damage or personal injury.

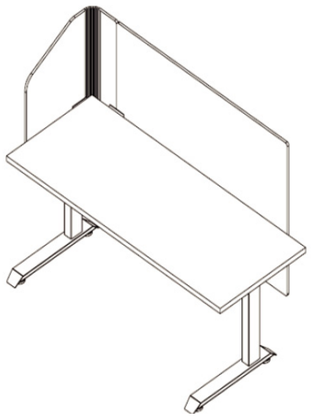

L Shape Partial Depth
Privacy Screen

What's Included:

Screen and Brackets

How to Specify:

Specify L for left and R for right

Color of P.E.T. and metal color, can be specified in order cover sheet.

Notes:

Screen meets 3/4 of worksurface depth

Options:

Side: **R** right **L** left

Code	Price	H	W	D
A001PE02-2902424-L	551	29	24	19
A001PE02-2903024-L	554	29	30	19
A001PE02-2903624-L	633	29	36	19
A001PE02-2904224-L	649	29	42	19
A001PE02-2904824-L	743	29	48	19
A001PE02-2905424-L	751	29	54	19
A001PE02-2906024-L	759	29	60	19
A001PE02-2906624-L	782	29	66	19
A001PE02-2907224-L	798	29	72	19
A001PE02-2902430-L	630	29	24	23

Code	Price	H	W	D
A001PE02-2903030-L	641	29	30	23
A001PE02-2903630-L	649	29	36	23
A001PE02-2904230-L	743	29	42	23
A001PE02-2904830-L	756	29	48	23
A001PE02-2905430-L	759	29	54	23
A001PE02-2906030-L	782	29	60	23
A001PE02-2906630-L	814	29	66	23
A001PE02-2907230-L	824	29	72	23
A001PE02-2902424-R	551	29	24	19
A001PE02-2903024-R	554	29	30	19
A001PE02-2903624-R	633	29	36	19
A001PE02-2904224-R	649	29	42	19
A001PE02-2904824-R	743	29	48	19
A001PE02-2905424-R	751	29	54	19
A001PE02-2906024-R	759	29	60	19
A001PE02-2906624-R	782	29	66	19
A001PE02-2907224-R	798	29	72	19
A001PE02-2902430-R	630	29	24	23
A001PE02-2903030-R	641	29	30	23
A001PE02-2903630-R	649	29	36	23
A001PE02-2904230-R	743	29	42	23
A001PE02-2904830-R	756	29	48	23
A001PE02-2905430-R	759	29	54	23
A001PE02-2906030-R	782	29	60	23
A001PE02-2906630-R	814	29	66	23
A001PE02-2907230-R	824	29	72	23

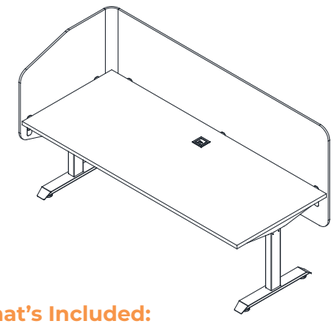

L Shape Full Depth
Privacy Screen

What's Included:

Screen and Brackets

How to Specify:

Specify L for left and R for right. Color of P.E.T. and metal color, can be specified in order cover sheet.

Notes:

Options:

Side: **R** right **L** left

Code	Price	H	W	D
A001PE19-2902424-R	622	29	24	24
A001PE19-2903024-R	643	29	30	24
A001PE19-2903624-R	665	29	36	24
A001PE19-2904224-R	730	29	42	24
A001PE19-2904824-R	747	29	48	24
A001PE19-2905424-R	853	29	54	24
A001PE19-2906024-R	869	29	60	24
A001PE19-2906624-R	890	29	66	24
A001PE19-2907224-R	912	29	72	24
A001PE19-2902430-R	644	29	24	30
A001PE19-2903030-R	665	29	30	30
A001PE19-2903630-R	687	29	36	30
A001PE19-2904230-R	762	29	42	30
A001PE19-2904830-R	778	29	48	30
A001PE19-2905430-R	885	29	54	30
A001PE19-2906030-R	901	29	60	30
A001PE19-2906630-R	923	29	66	30
A001PE19-2907230-R	944	29	72	30

Code	Price	H	W	D
A001PE19-2902424-L	622	29	24	24
A001PE19-2903024-L	643	29	30	24
A001PE19-2903624-L	665	29	36	24
A001PE19-2904224-L	730	29	42	24
A001PE19-2904824-L	747	29	48	24
A001PE19-2905424-L	853	29	54	24
A001PE19-2906024-L	869	29	60	24
A001PE19-2906624-L	890	29	66	24
A001PE19-2907224-L	912	29	72	24
A001PE19-2902430-L	644	29	24	30
A001PE19-2903030-L	665	29	30	30
A001PE19-2903630-L	687	29	36	30
A001PE19-2904230-L	762	29	42	30
A001PE19-2904830-L	778	29	48	30
A001PE19-2905430-L	885	29	54	30
A001PE19-2906030-L	901	29	60	30
A001PE19-2906630-L	923	29	66	30
A001PE19-2907230-L	944	29	72	30

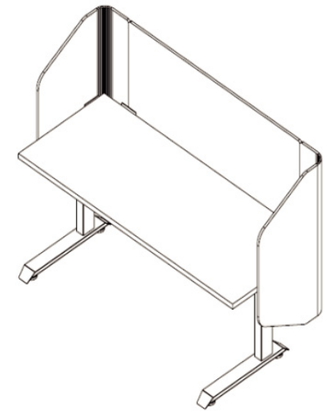

U Shape Partial Depth
Privacy Screen

What's Included:

Screen and Brackets

How to Specify:

Color of P.E.T. and metal color, can be specified in order cover sheet.

Notes:

Screen meets 3/4 of worksurface depth

Code	Price	H	W	D
A001PE03-2903624-0	788	29	36	19
A001PE03-2904224-0	805	29	42	19
A001PE03-2904824-0	882	29	48	19
A001PE03-2905424-0	903	29	54	19
A001PE03-2906024-0	917	29	60	19
A001PE03-2906624-0	924	29	66	19
A001PE03-2907224-0	935	29	72	19
A001PE03-2903630-0	809	29	36	23
A001PE03-2904230-0	826	29	42	23
A001PE03-2904830-0	903	29	48	23
A001PE03-2905430-0	924	29	54	23
A001PE03-2906030-0	938	29	60	23
A001PE03-2906630-0	945	29	66	23
A001PE03-2907230-0	956	29	72	23

Code	Price	H	W	D
A001PE03-2903423-0	788	29	34	18
A001PE03-2904023-0	805	29	40	18
A001PE03-2904623-0	882	29	46	18
A001PE03-2905223-0	903	29	52	18
A001PE03-2905823-0	917	29	58	18
A001PE03-2906423-0	924	29	64	18
A001PE03-2907023-0	935	29	70	18
A001PE03-2903429-0	809	29	34	22
A001PE03-2904029-0	826	29	40	22
A001PE03-2904629-0	903	29	46	22
A001PE03-2905229-0	924	29	52	22
A001PE03-2905829-0	938	29	58	22
A001PE03-2906429-0	945	29	64	22
A001PE03-2907029-0	956	29	70	22

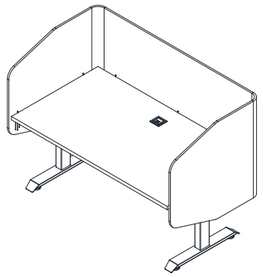

U Shape Full Depth Privacy Screen

36”- 60”Wide

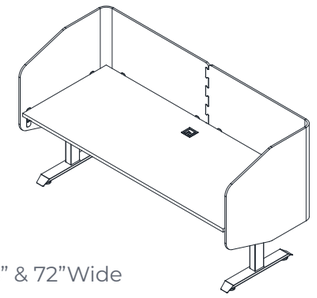

66” & 72”Wide

What’s Included:

Screen and Brackets.

How to Specify:

Specify L for left and R for right. Color of P.E.T. and metal color, can be specified in order cover sheet.

Notes:

Sizes 36”W-60”W made up of 1 single piece of P.E.T while 66”W & 72”W are 2 pieces total.

Options:

Side: **R** right **L** left

Code	Price	H	W
A001PE20-2903624-0	936	29	36
A001PE20-2904224-0	947	29	42
A001PE20-2904824-0	1027	29	48
A001PE20-2905424-0	1037	29	54
A001PE20-2906024-0	1048	29	60
A001PE20-2906624-0	1293	29	66
A001PE20-2907224-0	1317	29	72
A001PE20-2903630-0	958	29	36
A001PE20-2904230-0	968	29	42
A001PE20-2904830-0	1069	29	48
A001PE20-2905430-0	1080	29	54
A001PE20-2906030-0	1293	29	60
A001PE20-2906630-0	1317	29	66
A001PE20-2907230-0	1341	29	72

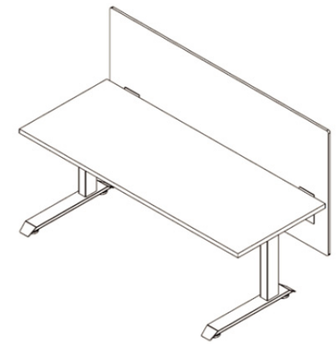

Straight Run Privacy Screen

What’s Included:

Screen and Brackets

How to Specify:

Color of P.E.T. and metal color, can be specified in order cover sheet.

Code	Price	H	W
A001PE01-2902400-0	318	18	24
A001PE01-2903000-0	327	18	30
A001PE01-2903600-0	347	18	36
A001PE01-2904200-0	350	18	42
A001PE01-2904800-0	467	18	48
A001PE01-2905400-0	477	18	54
A001PE01-2906000-0	492	18	60
A001PE01-2906600-0	530	18	66
A001PE01-2907200-0	540	18	72

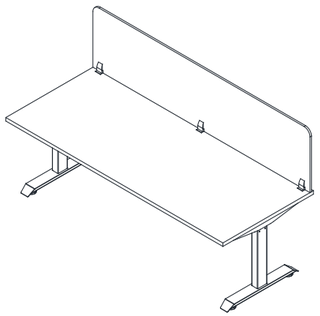

Clamp Mount Screens

What's Included:

Screen and Clamp-On Brackets

How to Specify:

Color of P.E.T. and metal color, can be specified in order cover sheet.

Notes:

Sizes up to 42"W come with 2 clamp-on brackets, while sizes 48"W and above come with 3 brackets.

Code	Price	H	W
A001PE18-1801800-0	258	18	18
A001PE18-1802400-0	339	18	24
A001PE18-1803000-0	345	18	30
A001PE18-1803600-0	360	18	36
A001PE18-1804200-0	379	18	42
A001PE18-1804800-0	440	18	48
A001PE18-1805400-0	480	18	54
A001PE18-1806000-0	497	18	60
A001PE18-1806600-0	554	18	66
A001PE18-1807200-0	627	18	72

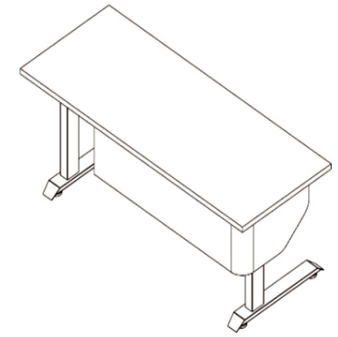

Modesty
Partial Wrap/integrated L Shape

What's Included:

Modesty panel and brackets

How to Specify:

Specify L for left and R for right

Color of P.E.T. and metal color, can be specified in order cover sheet.

Options:

Side: **R** right **L** left

Code	Price	H	W	D	Code	Price	H	W	D
A001PE05-1002424-L	502	10	17	17	A001PE05-1002424-R	502	10	17	17
A001PE05-1003024-L	504	10	23	17	A001PE05-1003024-R	504	10	23	17
A001PE05-1003624-L	507	10	29	17	A001PE05-1003624-R	507	10	29	17
A001PE05-1004224-L	541	10	35	17	A001PE05-1004224-R	541	10	35	17
A001PE05-1004824-L	604	10	41	17	A001PE05-1004824-R	604	10	41	17
A001PE05-1005424-L	652	10	47	17	A001PE05-1005424-R	652	10	47	17
A001PE05-1006024-L	659	10	53	17	A001PE05-1006024-R	659	10	53	17
A001PE05-1006624-L	663	10	59	17	A001PE05-1006624-R	663	10	59	17
A001PE05-1007224-L	668	10	65	17	A001PE05-1007224-R	668	10	65	17
A001PE05-1002430-L	512	10	17	23	A001PE05-1002430-R	512	10	17	23
A001PE05-1003030-L	515	10	23	23	A001PE05-1003030-R	515	10	23	23
A001PE05-1003630-L	518	10	29	23	A001PE05-1003630-R	518	10	29	23
A001PE05-1004230-L	551	10	35	23	A001PE05-1004230-R	551	10	35	23
A001PE05-1004830-L	614	10	41	23	A001PE05-1004830-R	614	10	41	23
A001PE05-1005430-L	663	10	47	23	A001PE05-1005430-R	663	10	47	23
A001PE05-1006030-L	670	10	53	23	A001PE05-1006030-R	670	10	53	23
A001PE05-1006630-L	673	10	59	23	A001PE05-1006630-R	673	10	59	23
A001PE05-1007230-L	678	10	65	23	A001PE05-1007230-R	678	10	65	23

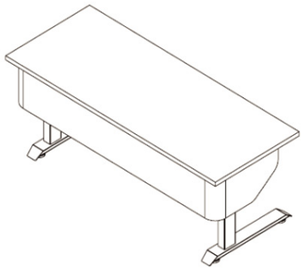

Modesty
Full Wrap/integrated U Shape

What's Included:

Modesty panel and brackets

How to Specify:

Color of P.E.T. and metal color, can be specified in order cover sheet.

Code	Price	H	W	D
A001PE06-1003624-0	708	10	36	17
A001PE06-1004224-0	729	10	42	17
A001PE06-1004824-0	824	10	48	17
A001PE06-1005424-0	840	10	54	17
A001PE06-1006024-0	851	10	60	17
A001PE06-1006624-0	866	10	66	17
A001PE06-1007224-0	877	10	72	17
A001PE06-1003630-0	718	10	36	23
A001PE06-1004230-0	739	10	42	23
A001PE06-1004830-0	835	10	48	23
A001PE06-1005430-0	851	10	54	23
A001PE06-1006030-0	861	10	60	23
A001PE06-1006630-0	877	10	66	23
A001PE06-1007230-0	887	10	72	23
A001PE06-1003423-0	708	10	34	16
A001PE06-1004023-0	729	10	40	16
A001PE06-1004623-0	824	10	46	16
A001PE06-1005223-0	840	10	52	16
A001PE06-1005823-0	851	10	58	16
A001PE06-1006423-0	866	10	64	16
A001PE06-1007023-0	877	10	70	16
A001PE06-1003429-0	718	10	34	22
A001PE06-1004029-0	739	10	40	22
A001PE06-1004629-0	835	10	46	22
A001PE06-1005229-0	851	10	52	22
A001PE06-1005829-0	861	10	58	22
A001PE06-1006429-0	877	10	64	22
A001PE06-1007029-0	887	10	70	22

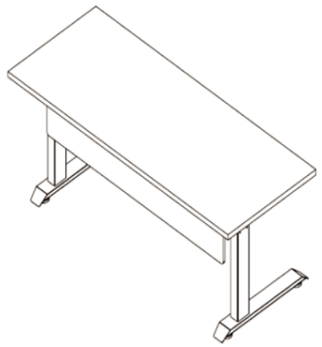

Modesty Straight

What's Included:

Modesty panel and brackets

How to Specify:

Color of P.E.T. and metal color, can be specified in order cover sheet.

Code	Price	H	W
A001PE04-1002400-0	284	10	24
A001PE04-1003000-0	289	10	30
A001PE04-1003600-0	300	10	36
A001PE04-1004200-0	307	10	42
A001PE04-1004800-0	368	10	48
A001PE04-1005400-0	380	10	54
A001PE04-1006000-0	394	10	60
A001PE04-1006600-0	401	10	66
A001PE04-1007200-0	415	10	72
A001PE04-1802400-0	294	18	24
A001PE04-1803000-0	299	18	30
A001PE04-1803600-0	311	18	36
A001PE04-1804200-0	317	18	42
A001PE04-1804800-0	378	18	48
A001PE04-1805400-0	391	18	54
A001PE04-1806000-0	404	18	60
A001PE04-1806600-0	412	18	66
A001PE04-1807200-0	425	18	72

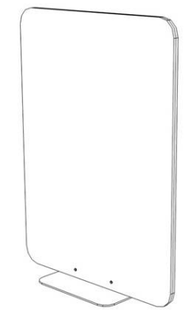

Freestanding Privacy Divider

What's Included:

Base, P.E.T. divider screen and Brackets

How to Specify:

Color of P.E.T. and metal color, can be specified in order cover sheet.

Code	Price	H	W	D
A001PE07-7203613-0	1744	72	36	13
A001PE07-6603613-0	1740	66	36	13
A001PE07-6003613-0	1735	60	36	13
A001PE07-5403613-0	1730	54	36	13
A001PE07-4803613-0	1725	48	36	13

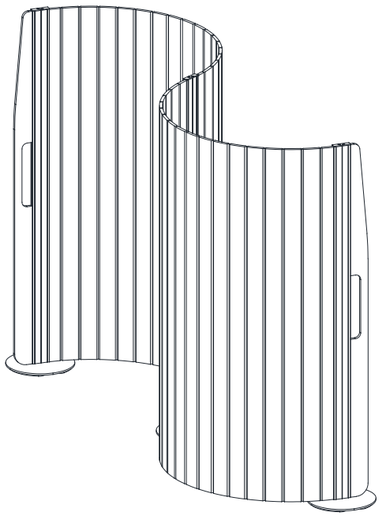

Floor Screen

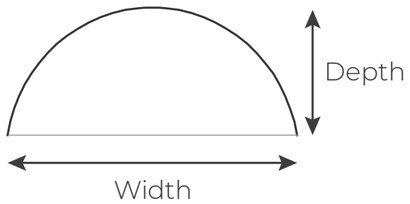

C Shape for Floor Screen*

What's Included:

Full floor screen: comes as a set with right and left end pieces as well as a mid section.

Add On: One mid screen, one mid extrusion with base plates

How to Specify:

Color of P.E.T. and metal color, can be specified in order cover sheet.

Notes:

Diameter of base plates is 11".

*The C-Shape Floor Screen accepts these width and depth dimensions.

When relocating floor screen to a new location, disassemble floor screen and reassemble it in the new location

Code	Price	Length	# of Mid Sections	C-shape Width	C-shape Depth	Height
A001PE17-6010800-F	7835	120	2	76	38	602
A001PE17-6610800-F	8424	120	2	76	38	662
A001PE17-7210800-F	8472	120	2	76	38	722
A001PE17-6016200-F	10744	174	3	111	55	603
A001PE17-6616200-F	11648	174	3	111	55	663
A001PE17-7216200-F	11719	174	3	111	55	723
A001PE17-6021600-F	13825	228	4	145	73	604
A001PE17-6621600-F	15003	228	4	145	73	664
A001PE17-7221600-F	15099	228	4	145	73	724
A001PE17-6027000-F	16813	282	5	180	90	605
A001PE17-6627000-F	18286	282	5	180	90	665
A001PE17-7227000-F	18405	282	5	180	90	725
A001PE17-6032400-F	20027	336	6	214	107	606
A001PE17-6632400-F	21714	336	6	214	107	666
A001PE17-7232400-F	21857	336	6	214	107	726
Add On - Mid Section + Extrusion						
A001PE17-6005400-M	3716			54		60
A001PE17-6605400-M	3740			54		66
A001PE17-7205400-M	3764			54		72

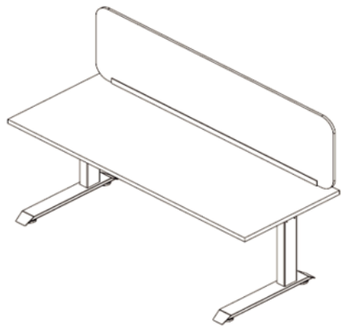

Surface Mount Privacy
Median Screen

What's Included:

Screen, Channel

How to Specify:

Color of P.E.T. and metal color, can be specified in order cover sheet.

Code	Price	H	W
A001PE09-1802300-0	390	18	23
A001PE09-1802900-0	406	18	29
A001PE09-1803500-0	417	18	35
A001PE09-1804100-0	481	18	41
A001PE09-1804700-0	490	18	47
A001PE09-1805300-0	515	18	53
A001PE09-1805900-0	530	18	59
A001PE09-1806500-0	568	18	65
A001PE09-1807100-0	571	18	71
A001PE09-1802200-0	390	18	22
A001PE09-1802800-0	406	18	28
A001PE09-1803300-0	417	18	33

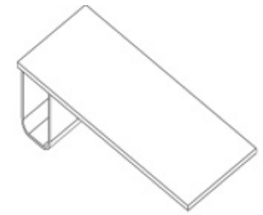

Under Surface Mounted
Bag Drop

What's Included:

P.E.T. Bag Drop, Fasteners

How to Specify:

Color of P.E.T. and metal color, can be specified in order cover sheet.

Code	Price	H	W
A002PE11-1501216-0	688	15	12

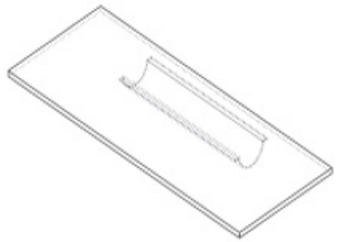

Under Surface Mounted
Wire Manager

What's Included:

P.E.T. Wire Manager, Fasteners

How to Specify:

Color of P.E.T. and metal color, can be specified in order cover sheet.

Code	Price	H	W
A002PE12-0503608-0	185	5	36

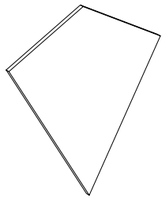

Kite

What's Included:

0.5" thick P.E.T wall tiles with adhesive.

A single piece or carton with quantity as indicated in the table below.

How to Specify:

Color of P.E.T. can be specified in order cover sheet.

Please note all quantities are a single color.

Code	Price	H	W	QUANTITY/ CARTON
A002PE01-1601400-S	227	16	14	1
A002PE01-1601400-H	2401	16	14	15
A002PE01-1601400-C	2938	16	14	28

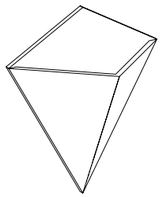

3D Kite

What's Included:

0.5" thick P.E.T wall tiles with adhesive.

A single piece or carton with quantity as indicated in the table below.

How to Specify:

Color of P.E.T. can be specified in order cover sheet.

Please note all quantities are a single color.

Notes:

3D Kite comes with 7" deep pocket which is non weight bearing.

Recommended for light, faux plants only.

Code	Price	H	W	QUANTITY/ CARTON
A002PE02-1601400-S	391	16	14	1
A002PE02-1601400-H	1379	16	14	5
A002PE02-1601400-C	1813	16	14	9

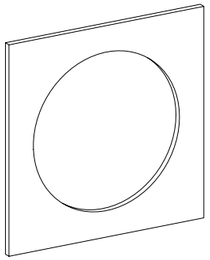

Circle Square

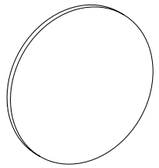

What's Included:

0.5" thick P.E.T wall tiles with adhesive.

A single unit consists of a 16X16 square tile with circle cut out and the 12" diameter circle. A carton consists of 20 units.

How to Specify:

Color of P.E.T. can be specified in order cover sheet.

Please note all quantities are a single color.

Code	Price	H	W	QUANTITY/ CARTON
A002PE03-1601600-S	274	16	16	1
A002PE03-1601600-H	2659	16	16	1111
A002PE03-1601600-C	3292	16	16	20

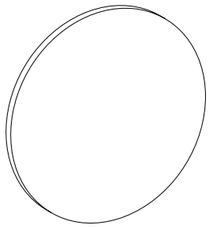

Circle

What's Included:

0.5" thick P.E.T wall tiles with adhesive.

A single piece or carton with quantity as indicated in the table below.

How to Specify:

Color of P.E.T. can be specified in order cover sheet.

Please note all quantities are a single color.

Code	Price	Diameter	QUANTITY/ CARTON
A002PE04-1201600-S	227	12"	1
A002PE04-1201600-H	1761	12"	11
A002PE04-1201600-C	2463	12"	20

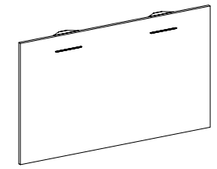

Echo Hanging Tackboard

What's Included:

P.E.T. tackboard. Whiteboard available for purchase separately.

How to Specify:

Color of P.E.T. and metal color, can be specified in order cover sheet.

Notes:

Compatible with Switch gallery panel

Code	Price	H	W
A003PE14-2002400-S	362	20	24
A003PE14-2003000-S	374	20	30
A003PE14-2003600-S	394	20	36
A003PE14-2004200-S	442	20	42
A003PE14-2004800-S	459	20	48
A003PE14-3002400-S	385	30	24
A003PE14-3003000-S	405	30	30
A003PE14-3003600-S	446	30	36
A003PE14-3004200-S	546	30	42
A003PE14-3004800-S	581	30	48

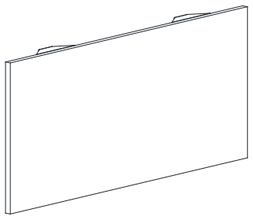

Hanging Tackboard
without Whiteboard

What's Included:

P.E.T. tackboard.

How to Specify:

Color of P.E.T. and metal color, can be specified in order cover sheet.

Notes:

Compatible with Switch gallery panel

Code	Price	H	W
A003PE15-1202400-S	341	12	24
A003PE15-1203000-S	345	12	30
A003PE15-1203600-S	352	12	36
A003PE15-1204200-S	365	12	42
A003PE15-1204800-S	381	12	48
A003PE15-2002400-S	368	20	24
A003PE15-2003000-S	375	20	30
A003PE15-2003600-S	385	20	36
A003PE15-2004200-S	426	20	42
A003PE15-2004800-S	437	20	48
A003PE15-3002400-S	381	30	24
A003PE15-3003000-S	391	30	30
A003PE15-3003600-S	418	30	36
A003PE15-3004200-S	515	30	42
A003PE15-3004800-S	568	30	48

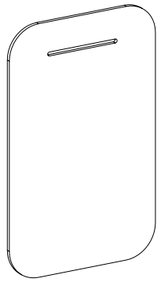

Whiteboard- half width

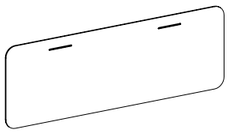

Whiteboard- full width

What's Included:

Whiteboard for hanging tackboards

How to Specify:

Select nominal half width or full width of the P.E.T hanging tackboard

Notes:

Whiteboard is not magnetic.

Code	Price	H	W
for half widths			
A002WB10-1601200-H	257	16	8
A002WB10-1601500-H	317	16	11
A002WB10-1601800-H	378	16	14
A002WB10-1602100-H	467	16	17
A002WB10-1602400-H	504	16	20
for full widths			
A002WB10-1602400-F	506	16	20
A002WB10-1603000-F	636	16	26
A002WB10-1603600-F	663	16	32
A002WB10-1604200-F	819	16	38
A002WB10-1604800-F	845	16	44

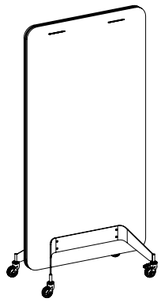

Echo Mobile Screen
with Whiteboard mount

What's Included:

Mobile screen base with two lockable and two non lockable casters and whiteboard mount (whiteboard to be purchased separately).

Casters available in black color only

How to Specify:

Color of P.E.T and metal color, can be specified in order cover sheet.

Laminate core available in black and white

Code	Price	H	W	D
A001PE16-6603619-W	4191	66	36	19
A001PE16-7203619-W	4197	72	36	19
Whiteboard for mobile screens				
A002WB10-4203600-M	1845	42	34	

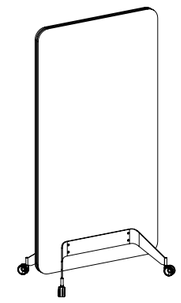

Echo Mobile Screen
without
Whiteboard mount

What's Included:

Mobile screen, base with castors and whiteboard optional

How to Specify:

Code	Price	H	W	D
A001PE16-6603619-0	4099	66	36	19
A001PE16-7203619-0	4107	72	36	19

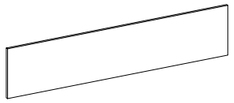

Echo Wall Mounted
Tackboard

What's Included:

Wall mounted P.E.T tackboard with a snap fit mount

How to Specify:

Color of P.E.T. can be specified in order cover sheet.

Code	Price	H	W
A003PE13-1002400-0	242	10	24
A003PE13-1003000-0	245	10	30
A003PE13-1003600-0	309	10	36
A003PE13-1004200-0	318	10	42
A003PE13-1004800-0	335	10	48
A003PE13-1005400-0	341	10	54
A003PE13-1006000-0	412	10	60
A003PE13-1006600-0	443	10	66
A003PE13-1007200-0	455	10	72
A003PE13-1007800-0	503	10	78
A003PE13-1008400-0	515	10	84
A003PE13-2402400-0	323	24	24
A003PE13-2403000-0	334	24	30
A003PE13-2403600-0	438	24	36
A003PE13-2404200-0	470	24	42
A003PE13-2404800-0	487	24	48
A003PE13-2405400-0	505	24	54
A003PE13-2406000-0	593	24	60
A003PE13-2406600-0	689	24	66
A003PE13-2407200-0	706	24	72
A003PE13-2407800-0	777	24	78
A003PE13-2408400-0	812	24	84
A003PE13-3002400-0	341	30	24
A003PE13-3003000-0	351	30	30
A003PE13-3003600-0	455	30	36
A003PE13-3004200-0	487	30	42

Code	Price	H	W
A003PE13-3004800-0	509	30	48
A003PE13-3005400-0	527	30	54
A003PE13-3006000-0	621	30	60
A003PE13-3006600-0	715	30	66
A003PE13-3007200-0	732	30	72
A003PE13-3007800-0	804	30	78
A003PE13-3008400-0	821	30	84
A003PE13-3602400-0	379	36	24
A003PE13-3603000-0	399	36	30
A003PE13-3603600-0	519	36	36
A003PE13-3604200-0	582	36	42
A003PE13-3604800-0	600	36	48
A003PE13-3605400-0	616	36	54
A003PE13-3606000-0	706	36	60
A003PE13-3606600-0	897	36	66
A003PE13-3607200-0	931	36	72
A003PE13-3607800-0	985	36	78
A003PE13-3608400-0	1020	36	84
A003PE13-4202400-0	461	42	24
A003PE13-4203000-0	480	42	30
A003PE13-4203600-0	659	42	36
A003PE13-4204200-0	723	42	42
A003PE13-4204800-0	746	42	48
A003PE13-4205400-0	762	42	54
A003PE13-4206000-0	915	42	60
A003PE13-4206600-0	1106	42	66
A003PE13-4207200-0	1140	42	72
A003PE13-4207800-0	1254	42	78
A003PE13-4208400-0	1288	42	84
A003PE13-4802400-0	474	48	24
A003PE13-4803000-0	497	48	30
A003PE13-4803600-0	681	48	36
A003PE13-4804200-0	747	48	42
A003PE13-4804800-0	765	48	48
A003PE13-4805400-0	782	48	54
A003PE13-4806000-0	938	48	60
A003PE13-4806600-0	1127	48	66
A003PE13-4807200-0	1164	48	72
A003PE13-4807800-0	1288	48	78
A003PE13-4808400-0	1326	48	84

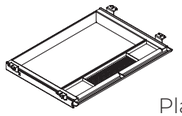

Plastic Pencil Drawer

Notes:

Plastic Pencil Drawers are available in black only.

Code	Price	H	W	D	Volume (ft³)	Weight (lb)
V-ADPP	100	2.8	21	16	0.62	2

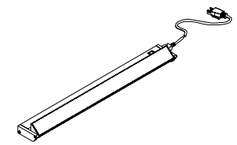

Task Light

What's Included:

One (1) LED task light

How to Specify:

One size smaller than the width of the overhead

Available in silver only

Notes:

Task light can be mounted to metal or laminate overheads

Task light mounts to metal overheads using supplied magnets

Task lights come with built-in occupancy sensor with 30 minute delay

Dimensions:

Length: 24", 36", 48"

Code	Price	H	W	D	Volume (ft³)	Weight (lb)
V-ELU-24	344	0	24	0	0	9.5
V-ELU-36	387	0	36	0	0	13.7
V-ELU-48	486	0	48	0.15	0	17.9

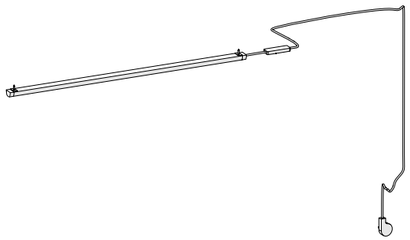

Halifax LED Light 30”(1) with transformer, Wire manager, Mounting Plate and hardware

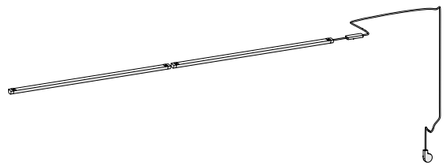

Halifax LED Light 30”(2) with transformer, Wire manager, Mounting Plate and hardware

What’s Included:

- LED Tasklight
- Transformer
- Mounting Plate
- Mounting Hardware

How to Specify:

3666 fits under overheads between 36”-66”W

7284 fits under overheads between 72-84”W

Notes:

7284 consists of two 30” lights

Hardware includes screws for wood overhead and magnets for metal overheads

Options:

Available in Silver only

Code	Price
LED Tasklight	
V-ELU-3666	481
V-ELU-7284	891

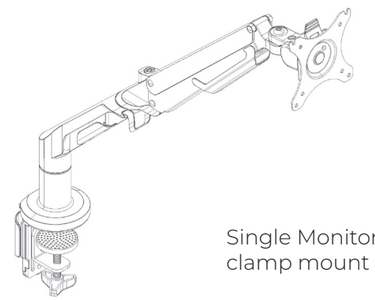

Single Monitor Arm - clamp mount

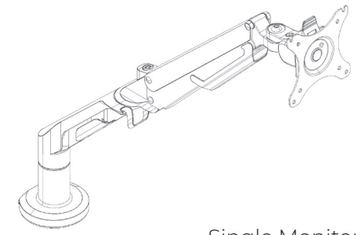

Single Monitor Arm - grommet mount

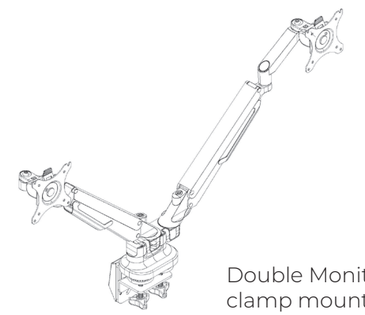

Double Monitor Arm - clamp mount

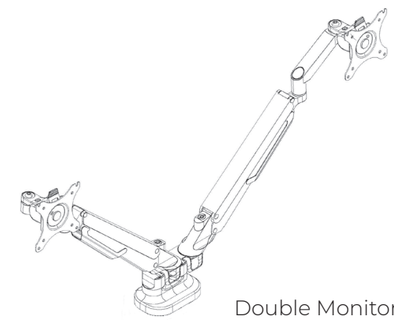

Double Monitor Arm - grommet mount

What’s Included:

One monitor arm and installation hardware for both clamp and grommet mount

How to Specify:

- Specify type

Notes:

Available in silver only

Single Monitor Arm

- Screen Size - 17”-36”
- Load Capacity - 6.6-26.4lbs/3-12kg
- Tilt Range - -90 degrees - -15 degrees

Dual Monitor Arm

- Screen Size - 17”-32”
- Load Capacity - 4.4-19.8lbs/2-9kg
- Tilt Range - -90 degrees - -15 degrees

Dimensions:

Vesa: 75x75 and 100x100

Code	Price
Monitor Arm - Single Mount	
V-AFMA-01	426
Monitor Arm - Double Mount	
V-AFMA-02	711

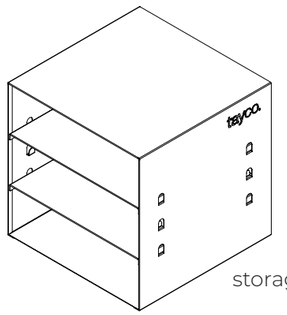

storage cube (shelf)

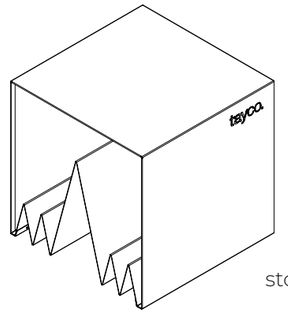

storage cube (sorter)

What's Included:

Shelf: Storage cube (1) and two shelf inserts (2).

Sorter: Storage cube (1) and an insert (1).

How to Specify:

Available in a variety of powder coat finish colors. Refer to the samples presented on Tayco metal finish card.

Storage cube outer shell and insert are available in a variety of color combinations.

Notes:

Storage cube can hold multiple folders and papers.

Color combination Options:

Insert Color	OUTER SHELL COLOR							
	P121 white	P112 silver	P114 black	P200 sunrise	P201 tropic	P202 vineyard	P203 sky	P204 meadow
P121 white	✔	✔	✔	✔	✔	✔	✔	✔
P112 silver	✔	✔	✔	✔	✔	✔	✔	✔
P114 black	✔	✔	✔	✔	✔	✔	✔	✔
P200 sunrise	✔	✔	✔	✔				
P201 tropic	✔	✔	✔		✔			
P202 vineyard	✔	✔	✔			✔		
P203 sky	✔	✔	✔				✔	
P204 meadow	✔	✔	✔					✔

Code	Price	H (in.)	W (in.)	D 1 (in.)	Weight (lb)	Volume (ft³)
storage cube (shelf)						
V-ACSF	432	12	12	12	8	1
storage cube (sorter)						
V-ACSR	349	12	12	12	8	1

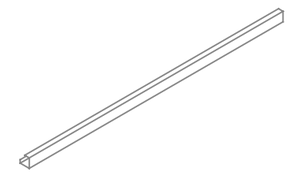

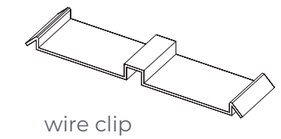

wire clip

What's Included:

One (1) cable manager

How to Specify:

Available in black only

Notes:

Dimensions:

length 12", 18", 24", 30", 36", 42", 48", 54", 60", 66", 72"

Code	Price	H	W	D	Weight (lb.)	Volume (ft³)
horizontal wire manager						
V-EWHB-12	9	1.5	12	1.5	0.15	0.02
V-EWHB-18	14	1.5	18	1.5	0.25	0.02
V-EWHB-24	19	1.5	24	1.5	0.35	0.03
V-EWHB-30	23	1.5	30	1.5	0.45	0.04
V-EWHB-36	26	1.5	36	1.5	0.55	0.05
V-EWHB-42	31	1.5	42	1.5	0.65	0.05
V-EWHB-48	34	1.5	48	1.5	0.75	0.06
V-EWHB-54	37	1.5	54	1.5	0.85	0.07
V-EWHB-60	43	1.5	60	1.5	0.95	0.08
V-EWHB-66	47	1.5	66	1.5	1.05	0.09
V-EWHB-72	49	1.5	72	1.5	1.15	0.09
worksurface wire clips						
V-EWHC	45					

elephant trunk

E-Chain Wire Manager

Notes:

Elephant trunk is available in silver only.

E-Chain is available in black only

Code	Price	H	W	D	Volume (ft³)	Weight (lb)
elephant trunk						
V-EE00	362	28	4	4	0.25	1
e-chain wire manager						
V-EE-28	336	28			1	1

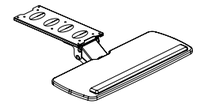

Articulating Keyboard Tray

What's Included:

Keyboard Tray, installation hardware.

How to Specify:

The articulating keyboards are available only in black.

Notes:

Keyboard trays provide adjustable ergonomic support for individuals in multi-task environments

Code	Price	H	W	D	Volume (ft³)	Weight (lb)
Articulating Keyboard Tray						
V-KASX-2510	459	0	25	10	0	15

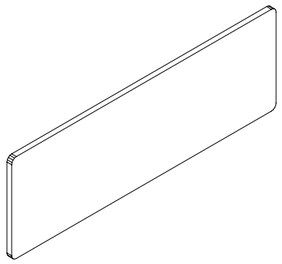

14-inch

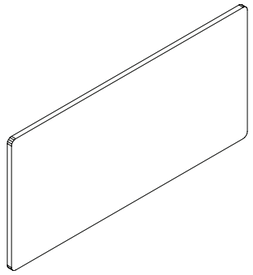

24-inch

What's Included:

Wall mounted tackboard, fasteners.

How to Specify:

Specify fabric.

Notes:

The wall mounted tackboard mounts to a wall in the workspace to provide a fabric wrapped tackable surface.

Options:

height	14, 24
width	24, 30, 36, 42, 48, 54, 60, 66, 72
screen finish	panel fabrics

Code	Price	H (in.)	W (in.)	Weight (lb)	Volume (ft³)
V-ATW0-1424-1	133	14	24	1.2	0.19
V-ATW0-1430-1	144	14	30	1.5	0.24
V-ATW0-1436-1	178	14	36	1.9	0.29
V-ATW0-1442-1	187	14	42	2.2	0.34
V-ATW0-1448-1	195	14	48	2.5	0.39
V-ATW0-1454-1	206	14	54	2.8	0.44
V-ATW0-1460-1	217	14	60	3.1	0.49
V-ATW0-1466-1	274	14	66	3.4	0.54
V-ATW0-1472-1	295	14	72	3.7	0.59
V-ATW0-1478-1	403	14	78	4	0.64
V-ATW0-1484-1	413	14	84	4.3	0.69
V-ATW0-1496-1	427	14	96	4.6	0.79
V-ATW0-2124-1	201	21	24	1.8	0.28
V-ATW0-2130-1	216	21	30	2.25	0.36
V-ATW0-2142-1	282	21	42	3.3	0.51
V-ATW0-2148-1	293	21	48	3.75	0.58
V-ATW0-2154-1	308	21	54	4.2	0.66
V-ATW0-2160-1	324	21	60	4.65	0.73
V-ATW0-2166-1	408	21	66	5.1	0.81
V-ATW0-2172-1	441	21	72	5.55	0.89
V-ATW0-2178-1	605	21	78	6	0.96
V-ATW0-2184-1	622	21	84	6.45	1.03
V-ATW0-2196-1	642	21	96	7.35	1.19
V-ATW0-2424-1	227	24	24	2.05	0.32
V-ATW0-2430-1	244	24	30	2.56	0.41
V-ATW0-2436-1	303	24	36	3.25	0.5
V-ATW0-2442-1	320	24	42	3.76	0.58
V-ATW0-2448-1	330	24	48	4.28	0.67
V-ATW0-2454-1	350	24	54	4.79	0.75
V-ATW0-2460-1	368	24	60	5.3	0.84
V-ATW0-2466-1	462	24	66	5.81	0.92
V-ATW0-2472-1	501	24	72	6.33	1.01
V-ATW0-2478-1	686	24	78	6.84	1.09
V-ATW0-2484-1	703	24	84	7.35	1.18
V-ATW0-2490-1	716	24	90	7.87	1.27
V-ATW0-2496-1	728	24	96	8.38	1.35

Code	Price	H (in.)	W (in.)	Weight (lb)	Volume (ft³)
V-ATW0-1424-2	170	14	24	1.2	0.19
V-ATW0-1430-2	180	14	30	1.5	0.24
V-ATW0-1436-2	251	14	36	1.9	0.29
V-ATW0-1442-2	262	14	42	2.2	0.34
V-ATW0-1448-2	267	14	48	2.5	0.39
V-ATW0-1454-2	279	14	54	2.8	0.44
V-ATW0-1460-2	289	14	60	3.1	0.49
V-ATW0-1466-2	382	14	66	3.4	0.54
V-ATW0-1472-2	405	14	72	3.7	0.59
V-ATW0-1478-2	513	14	78	4	0.64
V-ATW0-1484-2	523	14	84	4.3	0.69
V-ATW0-1490-2	530	14	90	4.6	0.74
V-ATW0-1496-2	574	14	96	4.9	0.79
V-ATW0-2124-2	237	21	24	1.8	0.28
V-ATW0-2130-2	251	21	30	2.25	0.36
V-ATW0-2136-2	340	21	36	2.85	0.43
V-ATW0-2142-2	356	21	42	3.3	0.51
V-ATW0-2148-2	365	21	48	3.75	0.58
V-ATW0-2154-2	383	21	54	4.2	0.66
V-ATW0-2160-2	398	21	60	4.65	0.73
V-ATW0-2166-2	517	21	66	5.1	0.81
V-ATW0-2172-2	553	21	72	5.55	0.89
V-ATW0-2178-2	715	21	78	6	0.96
V-ATW0-2184-2	730	21	84	6.45	1.03
V-ATW0-2190-2	741	21	90	6.9	1.11
V-ATW0-2196-2	788	21	96	7.35	1.19
V-ATW0-2424-2	263	24	24	2.05	0.32
V-ATW0-2430-2	280	24	30	2.56	0.41
V-ATW0-2436-2	376	24	36	3.25	0.5
V-ATW0-2442-2	395	24	42	3.76	0.58
V-ATW0-2448-2	403	24	48	4.28	0.67
V-ATW0-2454-2	424	24	54	4.79	0.75
V-ATW0-2460-2	440	24	60	5.3	0.84
V-ATW0-2466-2	571	24	66	5.81	0.92
V-ATW0-2472-2	610	24	72	6.33	1.01
V-ATW0-2478-2	794	24	78	6.84	1.09
V-ATW0-2484-2	812	24	84	7.35	1.18
V-ATW0-2490-2	826	24	90	7.87	1.27
V-ATW0-2496-2	874	24	96	8.38	1.35

Code	Price	H (in.)	W (in.)	Weight (lb)	Volume (ft³)
V-ATW0-1424-3	206	14	24	1.2	0.19
V-ATW0-1430-3	217	14	30	1.5	0.24
V-ATW0-1436-3	324	14	36	1.9	0.29
V-ATW0-1442-3	335	14	42	2.2	0.34
V-ATW0-1448-3	340	14	48	2.5	0.39
V-ATW0-1454-3	353	14	54	2.8	0.44
V-ATW0-1460-3	362	14	60	3.1	0.49
V-ATW0-1466-3	491	14	66	3.4	0.54
V-ATW0-1472-3	514	14	72	3.7	0.59
V-ATW0-1478-3	623	14	78	4	0.64
V-ATW0-1484-3	632	14	84	4.3	0.69
V-ATW0-1490-3	640	14	90	4.6	0.74
V-ATW0-1496-3	647	14	96	4.9	0.79
V-ATW0-2124-3	275	21	24	1.8	0.28
V-ATW0-2130-3	288	21	30	2.25	0.36
V-ATW0-2136-3	413	21	36	2.85	0.43
V-ATW0-2142-3	428	21	42	3.3	0.51
V-ATW0-2148-3	438	21	48	3.75	0.58
V-ATW0-2154-3	456	21	54	4.2	0.66
V-ATW0-2160-3	470	21	60	4.65	0.73
V-ATW0-2166-3	627	21	66	5.1	0.81
V-ATW0-2172-3	662	21	72	5.55	0.89
V-ATW0-2178-3	824	21	78	6	0.96
V-ATW0-2184-3	840	21	84	6.45	1.03
V-ATW0-2190-3	850	21	90	6.9	1.11
V-ATW0-2196-3	862	21	96	7.35	1.19
V-ATW0-2424-3	301	24	24	2.05	0.32
V-ATW0-2430-3	318	24	30	2.56	0.41
V-ATW0-2436-3	449	24	36	3.25	0.5
V-ATW0-2442-3	465	24	42	3.76	0.58
V-ATW0-2448-3	477	24	48	4.28	0.67
V-ATW0-2454-3	497	24	54	4.79	0.75
V-ATW0-2460-3	514	24	60	5.3	0.84
V-ATW0-2466-3	681	24	66	5.81	0.92
V-ATW0-2472-3	719	24	72	6.33	1.01
V-ATW0-2478-3	905	24	78	6.84	1.09
V-ATW0-2484-3	921	24	84	7.35	1.18
V-ATW0-2490-3	934	24	90	7.87	1.27
V-ATW0-2496-3	946	24	96	8.38	1.35

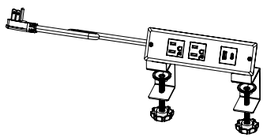

clamp mount desktop power module equipped with two ac outlets, one USB A and one USB C charging ports, and one (1) three prong cord

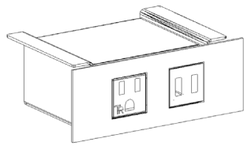

Side Mounted, 1 Outlet + Dual USB Ports

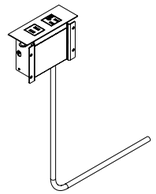

Side Mounted Module With Power And USB

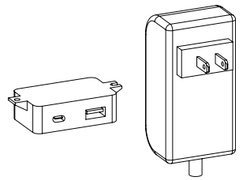

Side Mounted USB A & C, 1 Module, with AC Adapter

Code	Price	H	W	D	Volume	Weight
clamp mount desktop power module (2 AC outlets and 1 ea USB A & C ports)						
V-EMW-2AC	208	6	4	3	1	0.04
USB adapter (1 ea USB A & C ports with adapter)						
V-ESMU-A	204				2	2
side Mounted USB, 4 Module, With Hub						
V-ESMU-K	1134				2	2
side Mounted Module With Power And USB						
V-ESMU-P	296				2	2

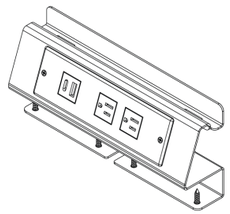

Ridge Power Module

What's Included:

Ridge Power Module with metal bracket

How to Specify:

The metal bracket is avaiable in all metal colors. Please refer to metal paint card. Also specify for power module color Black or White.

Notes:

The mountable power module avoids the visual mess of undersurface clamps.

Includes unique wire routing to clean up back of worksurface.

Includes upper ledge to accommodate cell phones and tablets.

Code	Price	H	W
V-ERPM	414	4	10

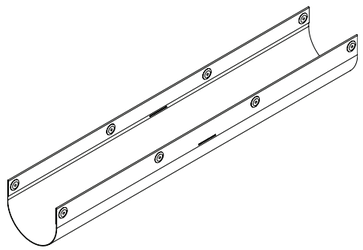

Flex Cable Organizer

What's Included:

Flex Cable organizer

How to Specify:

This accessory is available in grey only.

Notes:

Designed to fit the Volley height adjustable table frame.

Attaches to frame using magnets. Can also be attached to underside of worksurface using screws.

Height under worksurface is 5" after installation.

Made from flexible woven seam welded plastic.

Includes 2" opening midway on both sides for cable access

Options:

Depth 10"

Code	Price	W (in)	D (in)
V-EWMM-3610	106	36	10

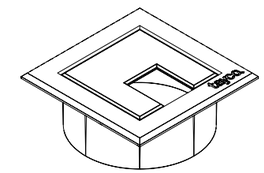

square grommet cover

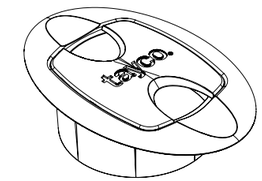

oval grommet cover

Notes:

Square Grommet covers available in black, silver and white.

Oval Grommet covers available in black and silver

Code	Price	H	W	D	Color	Weight (lb)
square grommet covers						
8540-1132	24	1.25	3.13	3.13	black	0.44
8540-1133	24	1.25	3.13	3.13	white	0.44
8540-1134	24	1.25	3.13	3.13	silver	0.44
oval grommet covers						
8540-0790	24	1.13	3	4.75	black	0.44
8540-0791	24	1.13	3	4.75	silver	0.44

Code	Price	H	W	D	Volume (ft³)	Weight (lb)
lock and key						
GEN-LOCK-CORE-KEY	23					