tayco®

Accessories Pricebook

July 2025

Contents

caution 3
Echo Privacy Screens 4
Partial Wrap Privacy Screen 4
Full Wrap U Shape Privacy Screen 6
Straight Run Privacy Screen 8
Echo Modesty Screens 9
Modesty Straight 9
Modesty Partial Wrap/integrated L Shape 10
Modesty Full Wrap/integrated U Shape 12
Echo Freestanding Privacy Divider 14
Echo Surface Mount Privacy Median Screen 15
Echo Under Surface Mounted Bag Drop 16
Echo Under Surface Mounted Wire Manager 17
Echo Wall Tiles 18
Kite 18
3D Kite 19
Circle Square 20
Circle 21
Echo Hanging Tackboards 22
Echo Whiteboard 23
Echo Mobile Screens 24
/w whiteboard mount 24
/wo whiteboard mount 25
Echo Wall Mounted Tackboard 26
Pencil Drawer 28
Task Light 29
LED tasklight 30
Monitor arm 31
Storage cube 32
Horizontal wire manager 33
Vertical wire manager 34
Keyboard tray 35
Wall Mounted Tackboard 36
grade 1 fabric 37
grade 2 fabric 38
grade 3 fabric 39
Power/USB 40
Power Ridge Module 41
Flex Cable Organizer 42
grommet covers 43
Lock and Key 44

Caution

Load Bottom Drawer First

- Operate one drawer at a time
- Units may tip if loaded incorrectly
- Units should be attached to a wall or other furniture to reduce tipping hazard
- Always load the heaviest files in the bottom drawer

Heavy Load

- Some products must be anchored to wall to ensure stability & safety.
- It is the owner and installers responsibility to ensure that the wall type and construction is of sufficient strength to carry the loads of any wall mounted products and their contents.
- Failure of the wall and anchors to support all imposed loads may result in property damage and/or personal injury.
- Tayco can provide size and empty weight of its products only. As wall blocking is considered a building construction process, Tayco cannot provide recommendations in this respect and cannot be responsible for damage or injury that may occur as a result of improper installation and/or blocking.

Instability Hazard

Mobile items on casters such as flip top, personal and movable tables of any type and storage items of any type may present an instability hazard if not secured correctly while in use or in storage. Flip top tables or training tables of any type, are inherently more unstable when folded. Tayco provides the following guidelines & warnings when using mobile products:

- Lock casters immediately after moving. Do not leave the casters unlocked when in use or in storage.
- Motion may increase the instability of any item with casters. If the wheels hit an obstruction the table's forward momentum often causes overturn, especially if the item is not equipped with wheel extensions. Exercise strong caution while moving these items.
- Use caution when abrupt level changes in the floor are present (such as a doorway or room threshold) as caster failure or tipping may result.
- Do not stand, sit or lean on mobile items for support. They are not intended for this use and personal injury or property damage may result.
- Mobile units that feature height adjustable elements must be lowered to the minimum compressed height when moving to prevent instability. It is also recommended the user remove all computer equipment or other accessories to prevent possible weight imbalance or damage to equipment.
- Failure to follow the guidelines above may result in property damage or personal injury.

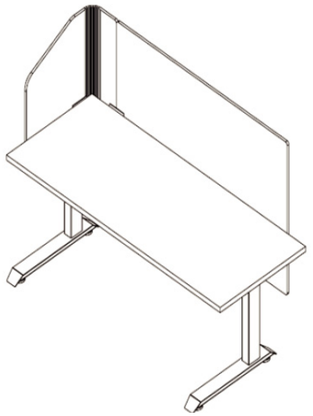

Partial Wrap Privacy Screen

What's Included:

Screen and Brackets

How to Specify:

Specify L for left and R for right

Color of P.E.T. and metal color, can be specified in order cover sheet.

Options:

Side: **R** right **L** left

Code	Price	H	W
A001PE02-2902424-L	525	29	24
A001PE02-2903024-L	528	29	30
A001PE02-2903624-L	603	29	36
A001PE02-2904224-L	618	29	42
A001PE02-2904824-L	708	29	48
A001PE02-2905424-L	715	29	54
A001PE02-2906024-L	723	29	60
A001PE02-2906624-L	745	29	66
A001PE02-2907224-L	760	29	72
A001PE02-2902430-L	600	29	24

Code	Price	H	W
A001PE02-2903030-L	610	29	30
A001PE02-2903630-L	618	29	36
A001PE02-2904230-L	708	29	42
A001PE02-2904830-L	720	29	48
A001PE02-2905430-L	723	29	54
A001PE02-2906030-L	745	29	60
A001PE02-2906630-L	775	29	66
A001PE02-2907230-L	785	29	72
A001PE02-2902424-R	525	29	24
A001PE02-2903024-R	528	29	30
A001PE02-2903624-R	603	29	36
A001PE02-2904224-R	618	29	42
A001PE02-2904824-R	708	29	48
A001PE02-2905424-R	715	29	54
A001PE02-2906024-R	723.37	29	60
A001PE02-2906624-R	745	29	66
A001PE02-2907224-R	760	29	72
A001PE02-2902430-R	600	29	24
A001PE02-2903030-R	610	29	30
A001PE02-2903630-R	618	29	36
A001PE02-2904230-R	708	29	42
A001PE02-2904830-R	720	29	48
A001PE02-2905430-R	723	29	54
A001PE02-2906030-R	745	29	60
A001PE02-2906630-R	775	29	66
A001PE02-2907230-R	785	29	72

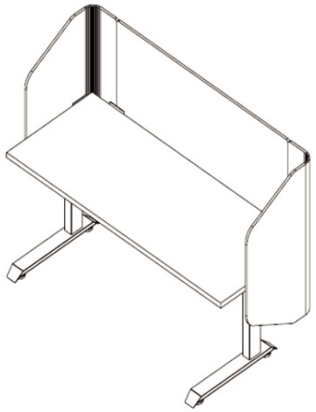

Full Wrap U Shape Privacy Screen

What's Included:

Screen and Brackets

How to Specify:

Color of P.E.T. and metal color, can be specified in order cover sheet.

Code	Price	H	W
A001PE03-2903624-0	750	29	36
A001PE03-2904224-0	767	29	42
A001PE03-2904824-0	840	29	48
A001PE03-2905424-0	860	29	54
A001PE03-2906024-0	873	29	60
A001PE03-2906624-0	880	29	66
A001PE03-2907224-0	890	29	72
A001PE03-2903630-0	770	29	36
A001PE03-2904230-0	787	29	42
A001PE03-2904830-0	860	29	48
A001PE03-2905430-0	880	29	54
A001PE03-2906030-0	893	29	60
A001PE03-2906630-0	900	29	66
A001PE03-2907230-0	910	29	72
A001PE03-2903423-0	750	29	36
A001PE03-2904023-0	767	29	42
A001PE03-2904623-0	840	29	48
A001PE03-2905223-0	860	29	54
A001PE03-2905823-0	873	29	60
A001PE03-2906423-0	880	29	66
A001PE03-2907023-0	890	29	72
A001PE03-2903429-0	770	29	36
A001PE03-2904029-0	787	29	42
A001PE03-2904629-0	860	29	48
A001PE03-2905229-0	880	29	54
A001PE03-2905829-0	893	29	60
A001PE03-2906429-0	900	29	66
A001PE03-2907029-0	910	29	72

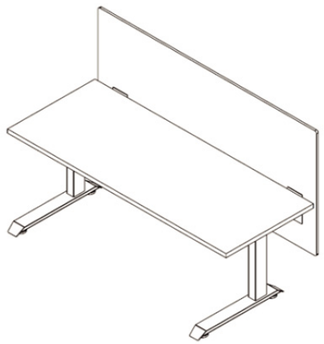

Straight Run Privacy Screen

What's Included:

Screen and Brackets

How to Specify:

Color of P.E.T. and metal color, can be specified in order cover sheet.

Code	Price	H	W
A001PE01-2902400-0	303	18	24
A001PE01-2903000-0	311	18	30
A001PE01-2903600-0	330	18	36
A001PE01-2904200-0	333	18	42
A001PE01-2904800-0	445	18	48
A001PE01-2905400-0	454	18	54
A001PE01-2906000-0	469	18	60
A001PE01-2906600-0	505	18	66
A001PE01-2907200-0	514	18	72

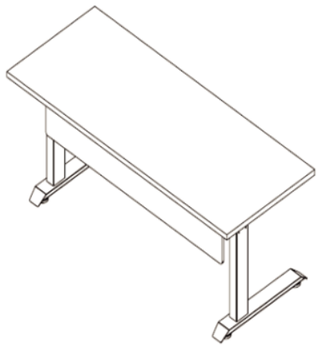

Modesty Straight

What's Included:

Modesty panel and brackets

How to Specify:

Color of P.E.T. and metal color, can be specified in order cover sheet.

Code	Price	H	W
A001PE04-1002400-0	270	10	24
A001PE04-1003000-0	275	10	30
A001PE04-1003600-0	286	10	36
A001PE04-1004200-0	293	10	42
A001PE04-1004800-0	350	10	48
A001PE04-1005400-0	362	10	54
A001PE04-1006000-0	375	10	60
A001PE04-1006600-0	382	10	66
A001PE04-1007200-0	395	10	72
A001PE04-1802400-0	280	18	24
A001PE04-1803000-0	285	18	30
A001PE04-1803600-0	296	18	36
A001PE04-1804200-0	302	18	42
A001PE04-1804800-0	360	18	48
A001PE04-1805400-0	372	18	54
A001PE04-1806000-0	385	18	60
A001PE04-1806600-0	392	18	66
A001PE04-1807200-0	405	18	72

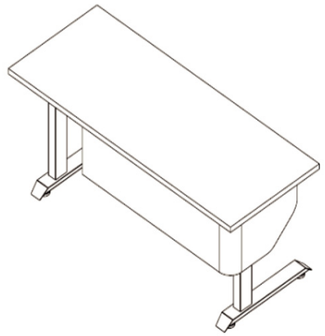

Modesty
Partial Wrap/integrated L Shape

What's Included:

Modesty panel and brackets

How to Specify:

Specify L for left and R for right

Color of P.E.T. and metal color, can be specified in order cover sheet.

Options:

Side: **R** right **L** left

Code	Price	H	W
A001PE05-1002424-L	478	10	17
A001PE05-1003024-L	480	10	23
A001PE05-1003624-L	483	10	29
A001PE05-1004224-L	515	10	35
A001PE05-1004824-L	575	10	41
A001PE05-1005424-L	621	10	47
A001PE05-1006024-L	628	10	53
A001PE05-1006624-L	631	10	59
A001PE05-1007224-L	636	10	65

Code	Price	H	W
A001PE05-1002430-L	488	10	17
A001PE05-1003030-L	490	10	23
A001PE05-1003630-L	493	10	29
A001PE05-1004230-L	525	10	35
A001PE05-1004830-L	585	10	41
A001PE05-1005430-L	632	10	47
A001PE05-1006030-L	638	10	53
A001PE05-1006630-L	641	10	59
A001PE05-1007230-L	646	10	65
A001PE05-1002424-R	478	10	17
A001PE05-1003024-R	480	10	23
A001PE05-1003624-R	483	10	29
A001PE05-1004224-R	515	10	35
A001PE05-1004824-R	575	10	41
A001PE05-1005424-R	621	10	47
A001PE05-1006024-R	628	10	53
A001PE05-1006624-R	631	10	59
A001PE05-1007224-R	636	10	65
A001PE05-1002430-R	488	10	17
A001PE05-1003030-R	490	10	23
A001PE05-1003630-R	493	10	29
A001PE05-1004230-R	525	10	35
A001PE05-1004830-R	585	10	41
A001PE05-1005430-R	631	10	47
A001PE05-1006030-R	638	10	53
A001PE05-1006630-R	641	10	59
A001PE05-1007230-R	646	10	65

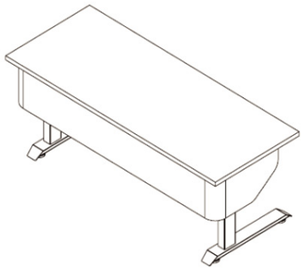

Modesty
Full Wrap/integrated U Shape

What's Included:

Modesty panel and brackets

How to Specify:

Color of P.E.T. and metal color, can be specified in order cover sheet.

Code	Price	H	W
A001PE06-1003624-0	674	10	34
A001PE06-1004224-0	694	10	40
A001PE06-1004824-0	785	10	46
A001PE06-1005424-0	800	10	52
A001PE06-1006024-0	810	10	58
A001PE06-1006624-0	825	10	64
A001PE06-1007224-0	835	10	70
A001PE06-1003630-0	684	10	34
A001PE06-1004230-0	704	10	40
A001PE06-1004830-0	795	10	46
A001PE06-1005430-0	810	10	52
A001PE06-1006030-0	820	10	58
A001PE06-1006630-0	835	10	64
A001PE06-1007230-0	845	10	70
A001PE06-1003423-0	674	10	34
A001PE06-1004023-0	694	10	40
A001PE06-1004623-0	785	10	46
A001PE06-1005223-0	800	10	52
A001PE06-1005823-0	810	10	58
A001PE06-1006423-0	825	10	64
A001PE06-1007023-0	835	10	70
A001PE06-1003429-0	684	10	34
A001PE06-1004029-0	704	10	40
A001PE06-1004629-0	795	10	46
A001PE06-1005292-0	810	10	52
A001PE06-1005829-0	820	10	58
A001PE06-1006429-0	835	10	64
A001PE06-1007029-0	845	10	70

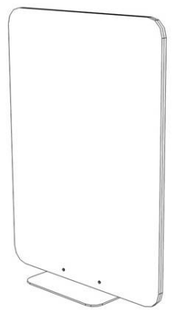

Freestanding Privacy
Divider

What's Included:

Base, P.E.T. dividerScreen and Brackets

How to Specify:

Color of P.E.T. and metal color, can be specified
in order cover sheet.

Code	Price	H	W
A001PE07-7203612-0	1661	72	36
A001PE07-6603612-0	1657	66	36
A001PE07-6003612-0	1652	60	36
A001PE07-5403612-0	1648	54	36
A001PE07-4803612-0	1643	48	36

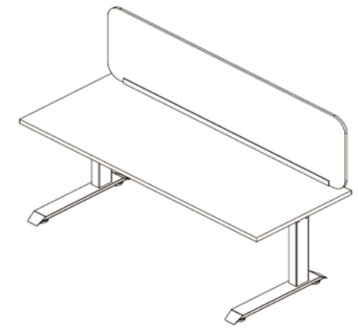

Surface Mount Privacy
Median Screen

What's Included:

Screen, Channel

How to Specify:

Color of P.E.T. and metal color, can be specified
in order cover sheet.

Code	Price	H	W
A001PE09-1802300-0	371	18	23
A001PE09-1802900-0	387	18	29
A001PE09-1803500-0	397	18	35
A001PE09-1804100-0	458	18	41
A001PE09-1804700-0	467	18	47
A001PE09-1805300-0	490	18	53
A001PE09-1805900-0	505	18	59
A001PE09-1806500-0	541	18	65
A001PE09-1807100-0	544	18	71
A001PE09-1802200-0	371	18	22
A001PE09-1802800-0	387	18	28
A001PE09-1803300-0	367	18	33

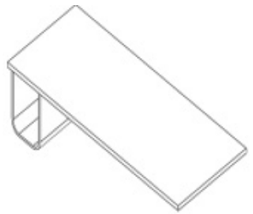

Under Surface Mounted
Bag Drop

What's Included:

P.E.T. Bag Drop, Fasteners

How to Specify:

Color of P.E.T. and metal color, can be specified
in order cover sheet.

Code	Price	H	W
A002PE11-1501216-0	655	15	12

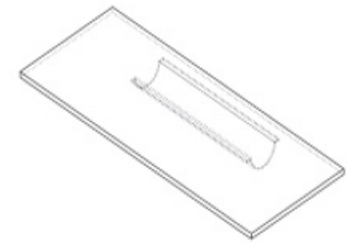

Under Surface Mounted
Wire Manager

What's Included:

P.E.T. Wire Manager, Fasteners

How to Specify:

Color of P.E.T. and metal color, can be specified
in order cover sheet.

Code	Price	H	W
A002PE12-0503608-0	176	5	36

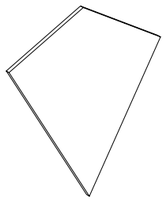

Kite

What's Included:

0.5" thick P.E.T wall tiles with adhesive.

A single piece or carton with quantity as indicated in the table below.

How to Specify:

Color of P.E.T. can be specified in order cover sheet.

Please note all quantities are a single color.

Code	Price	H	W	QUANTITY/ CARTON
A002PE01-1601400-S	216	16	14	1
A002PE01-1601400-H	2287	16	14	15
A002PE01-1601400-C	2798	16	14	28

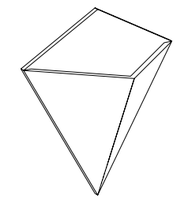

3D Kite

What's Included:

0.5" thick P.E.T wall tiles with adhesive.

A single piece or carton with quantity as indicated in the table below.

How to Specify:

Color of P.E.T. can be specified in order cover sheet.

Please note all quantities are a single color.

Notes:

3D Kite comes with 7" deep pocket which is non weight bearing.

Recommended for light, faux plants only.

Code	Price	H	W	QUANTITY/ CARTON
A002PE02-1601400-S	372	16	14	1
A002PE02-1601400-H	1313	16	14	5
A002PE02-1601400-C	1727	16	14	9

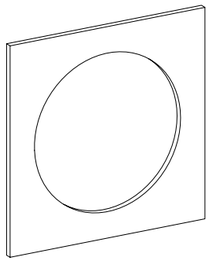

Circle Square

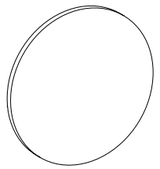

What's Included:

0.5" thick P.E.T wall tiles with adhesive.

A single unit consists of a 16X16 square tile with circle cut out and the 12" diameter circle. A carton consists of 20 units.

How to Specify:

Color of P.E.T. can be specified in order cover sheet.

Please note all quantities are a single color.

Code	Price	H	W	QUANTITY/ CARTON
A002PE03-1601600-S	261	16	16	1
A002PE03-1601600-H	2532	16	16	11
A002PE03-1601600-C	3135	16	16	20

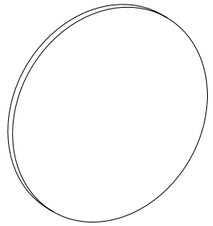

Circle

What's Included:

0.5" thick P.E.T wall tiles with adhesive.

A single piece or carton with quantity as indicated in the table below.

How to Specify:

Color of P.E.T. can be specified in order cover sheet.

Please note all quantities are a single color.

Code	Price	Diameter	QUANTITY/ CARTON
A002PE04-1201600-S	216	12"	1
A002PE04-1201600-H	1677	12"	11
A002PE04-1201600-C	2346	12"	20

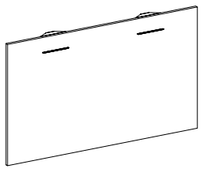

Echo Hanging Tackboard

What's Included:

P.E.T. tackboard. Whiteboard available for purchase separately.

How to Specify:

Color of P.E.T. and metal color, can be specified in order cover sheet.

Notes:

Compatible with Switch gallery panel

Code	Price	H	W
A003PE14-2002400-S	345	20	24
A003PE14-2003000-S	356	20	30
A003PE14-2003600-S	375	20	36
A003PE14-2004200-S	421	20	42
A003PE14-2004800-S	437	20	48
A003PE14-3002400-S	367	30	24
A003PE14-3003000-S	386	30	30
A003PE14-3003600-S	425	30	36
A003PE14-3004200-S	520	30	42
A003PE14-3004800-S	553	30	48

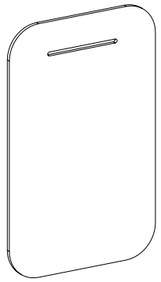

Whiteboard- half width

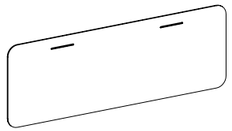

Whiteboard- full width

What's Included:

Whiteboard for hanging tackboards

How to Specify:

Select nominal half width or full width of the P.E.T hanging tackboard

Notes:

Whiteboard is not magnetic.

Code	Price	H	W
for half widths			
A002WB10-1601200-H	245	16	8
A002WB10-1601500-H	303	16	11
A002WB10-1601800-H	361	16	14
A002WB10-1602100-H	446	16	17
A002WB10-1602400-H	459	16	20
for full widths			
A002WB10-1602400-F	459	16	20
A002WB10-1603000-F	829	16	26
A002WB10-1603600-F	855	16	32
A002WB10-1604200-F	879	16	38
A002WB10-1604800-F	904	16	44

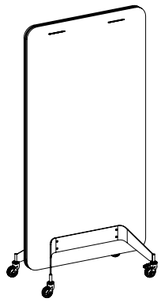

Echo Mobile Screen
with Whiteboard mount

What's Included:

Mobile screen base with two lockable and two non lockable casters and whiteboard mount (whiteboard to be purchased separately).

Casters available in black color only

How to Specify:

Color of P.E.T and metal color, can be specified in order cover sheet.

Laminate core available in black and white

Code	Price	H	W	D
A001PE16-6603619-W	3991	66	36	19
A001PE16-7203619-W	3997	72	36	
for mobile screens				
A002WB10-4203600-M	1833	42	34	

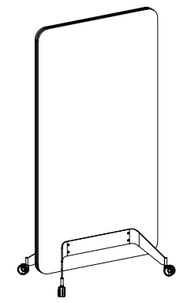

Echo Mobile Screen
without
Whiteboard mount

What's Included:

Mobile screen, base with castors and whiteboard optional

How to Specify:

Color of P.E.T and metal color, can be specified in order cover sheet.

Laminate core available in black and white

Code	Price	H	W	D
A001PE16-6603619-0	3904	66	36	19
A001PE16-7203619-0	3911	72	36	19

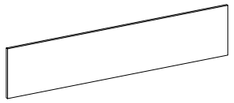

Echo Wall Mounted
Tackboard

What's Included:

Wall mounted P.E.T tackboard with a snap fit mount

How to Specify:

Color of P.E.T. can be specified in order cover sheet.

Code	Price	H	W
A003PE13-1002400-0	230	10	24
A003PE13-1003000-0	233	10	30
A003PE13-1003600-0	294	10	36
A003PE13-1004200-0	303	10	42
A003PE13-1004800-0	319	10	48
A003PE13-1005400-0	325	10	54
A003PE13-1006000-0	392	10	60
A003PE13-1006600-0	422	10	66
A003PE13-1007200-0	433	10	72
A003PE13-1007800-0	479	10	78
A003PE13-1008400-0	490	10	84
A003PE13-2402400-0	308	24	24
A003PE13-2403000-0	318	24	30
A003PE13-2403600-0	417	24	36
A003PE13-2404200-0	448	24	42
A003PE13-2404800-0	464	24	48
A003PE13-2405400-0	481	24	54
A003PE13-2406000-0	565	24	60
A003PE13-2406600-0	656	24	66
A003PE13-2407200-0	672	24	72
A003PE13-2407800-0	740	24	78
A003PE13-2408400-0	773	24	84
A003PE13-3002400-0	325	30	24
A003PE13-3003000-0	334	30	30
A003PE13-3003600-0	433	30	36
A003PE13-3004200-0	464	30	42

Code	Price	H	W
A003PE13-3004800-0	485	30	48
A003PE13-3005400-0	502	30	54
A003PE13-3006000-0	591	30	60
A003PE13-3006600-0	681	30	66
A003PE13-3007200-0	697	30	72
A003PE13-3007800-0	766	30	78
A003PE13-3008400-0	782	30	84
A003PE13-3602400-0	361	36	24
A003PE13-3603000-0	380	36	30
A003PE13-3603600-0	494	36	36
A003PE13-3604200-0	554	36	42
A003PE13-3604800-0	571	36	48
A003PE13-3605400-0	587	36	54
A003PE13-3606000-0	672	36	60
A003PE13-3606600-0	854	36	66
A003PE13-3607200-0	887	36	72
A003PE13-3607800-0	938	36	78
A003PE13-3608400-0	971	36	84
A003PE13-4202400-0	439	42	24
A003PE13-4203000-0	457	42	30
A003PE13-4203600-0	628	42	36
A003PE13-4204200-0	689	42	42
A003PE13-4204800-0	710	42	48
A003PE13-4205400-0	726	42	54
A003PE13-4206000-0	871	42	60
A003PE13-4206600-0	1053	42	66
A003PE13-4207200-0	1086	42	72
A003PE13-4207800-0	1194	42	78
A003PE13-4208400-0	1227	42	84
A003PE13-4802400-0	451	48	24
A003PE13-4803000-0	473	48	30
A003PE13-4803600-0	649	48	36
A003PE13-4804200-0	711	48	42
A003PE13-4804800-0	729	48	48
A003PE13-4805400-0	745	48	54
A003PE13-4806000-0	893	48	60
A003PE13-4806600-0	1073	48	66
A003PE13-4807200-0	1109	48	72
A003PE13-4807800-0	1227	48	78
A003PE13-4808400-0	1263	48	84

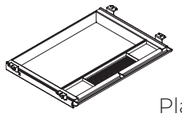

Plastic Pencil Drawer

Notes:

Plastic Pencil Drawers are available in black only.

Code	Price	H	W	D	Volume (ft³)	Weight (lb)
V-ADPP	92	2.8	21	16	0.62	2

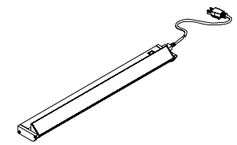

Task Light

What's Included:

One (1) fluorescent task light

How to Specify:

One size smaller than the width of the overhead

Available in silver only

Notes:

Task light can be mounted to metal or laminate overheads

Task light mounts to metal overheads using supplied magnets

Dimensions:

Length: 24", 36", 48"

Code	Price	H	W	D	Volume (ft³)	Weight (lb)
V-ELU-24	316	0	24	0	0	9.5
V-ELU-36	355	0	36	0	0	13.7
V-ELU-48	446	0	48	0.15	0	17.9

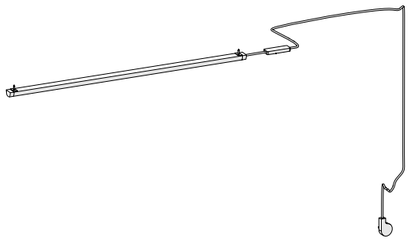

Halifax LED Light 30”(1) with transformer, Wire manager, Mounting Plate and hardware

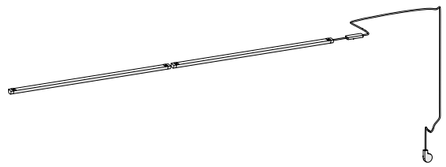

Halifax LED Light 30”(2) with transformer, Wire manager, Mounting Plate and hardware

What’s Included:

- LED Tasklight
- Transformer
- Mounting Plate
- Mounting Hardware

How to Specify:

3666 fits under overheads between 36”-66”W

7284 fits under overheads between 72-84”W

Notes:

7284 consists of two 30” lights

Hardware includes screws for wood overhead and magnets for metal overheads

Options:

Available in Silver only

Code	Price
LED Tasklight	
V-ELU-3666	441
V-ELU-7284	817

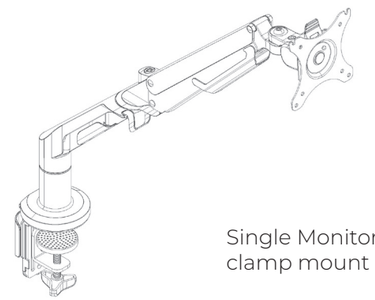

Single Monitor Arm - clamp mount

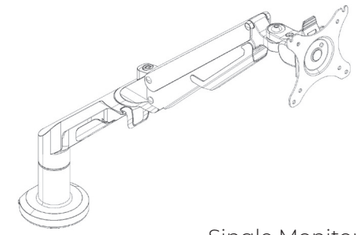

Single Monitor Arm - grommet mount

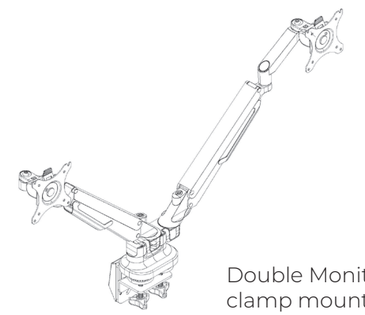

Double Monitor Arm - clamp mount

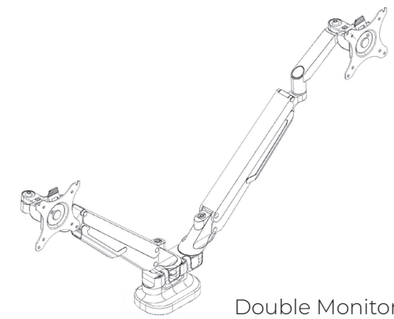

Double Monitor Arm - grommet mount

What’s Included:

One monitor arm and installation hardware for both clamp and grommet mount

How to Specify:

- Specify type

Notes:

Available in silver only

Single Monitor Arm

- Screen Size - 17”-36”
- Load Capacity - 6.6-26.4lbs/3-12kg
- Tilt Range - -90 degrees - -15 degrees

Dual Monitor Arm

- Screen Size - 17”-32”
- Load Capacity - 4.4-19.8lbs/2-9kg
- Tilt Range - -90 degrees - -15 degrees

Dimensions:

Vesa: 75x75 and 100x100

Code	Price
Monitor Arm - Single Mount	
V-AFMA-01	391
Monitor Arm - Double Mount	
V-AFMA-02	652

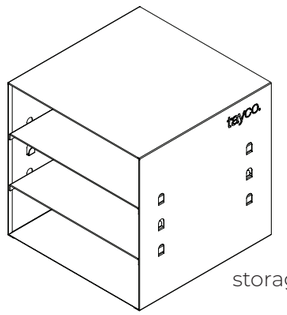

storage cube (shelf)

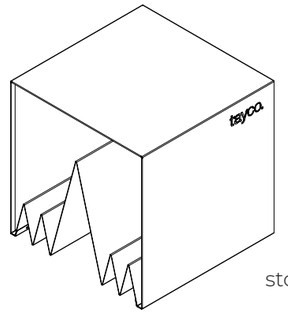

storage cube (sorter)

What's Included:

Shelf: Storage cube (1) and two shelf inserts (2).

Sorter: Storage cube (1) and an insert (1).

How to Specify:

Available in a variety of powder coat finish colors. Refer to the samples presented on Tayco metal finish card.

Storage cube outer shell and insert are available in a variety of color combinations.

Notes:

Storage cube can hold multiple folders and papers.

Color combination Options:

Insert Color	OUTER SHELL COLOR							
	P121 white	P112 silver	P114 black	P200 sunrise	P201 tropic	P202 vineyard	P203 sky	P204 meadow
P121 white	✔	✔	✔	✔	✔	✔	✔	✔
P112 silver	✔	✔	✔	✔	✔	✔	✔	✔
P114 black	✔	✔	✔	✔	✔	✔	✔	✔
P200 sunrise	✔	✔	✔	✔				
P201 tropic	✔	✔	✔		✔			
P202 vineyard	✔	✔	✔			✔		
P203 sky	✔	✔	✔				✔	
P204 meadow	✔	✔	✔					✔

Code	Price	H (in.)	W (in.)	D 1 (in.)	Weight (lb)	Volume (ft³)
storage cube (shelf)						
V-ACSF	396	12	12	12	8	1
storage cube (sorter)						
V-ACSR	320	12	12	12	8	1

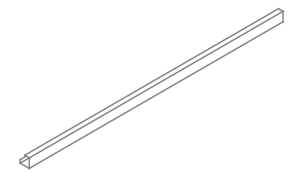

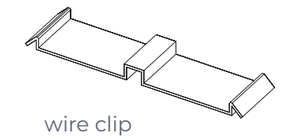

wire clip

What's Included:

One (1) cable manager

How to Specify:

Available in black only

Notes:

Dimensions:

length 12", 18", 24", 30", 36", 42", 48", 54", 60", 66", 72"

Code	Price	H	W	D	Weight (lb.)	Volume (ft³)
horizontal wire manager						
V-EWHB-12	8	1.5	12	1.5	0.15	0.02
V-EWHB-18	13	1.5	18	1.5	0.25	0.02
V-EWHB-24	17	1.5	24	1.5	0.35	0.03
V-EWHB-30	21	1.5	30	1.5	0.45	0.04
V-EWHB-36	24	1.5	36	1.5	0.55	0.05
V-EWHB-42	28	1.5	42	1.5	0.65	0.05
V-EWHB-48	31	1.5	48	1.5	0.75	0.06
V-EWHB-54	34	1.5	54	1.5	0.85	0.07
V-EWHB-60	39	1.5	60	1.5	0.95	0.08
V-EWHB-66	43	1.5	66	1.5	1.05	0.09
V-EWHB-72	45	1.5	72	1.5	1.15	0.09
worksurface wire clips						
V-EWHC	41					

elephant trunk

E-Chain Wire Manager

Notes:

Elephant trunk is available in silver only.

E-Chain is available in black only

Code	Price	H	W	D	Volume (ft³)	Weight (lb)
elephant trunk						
V-EE00	332	28	4	4	0.25	1
e-chain wire manager						
V-EE-28	308	28			1	1

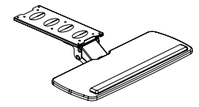

Articulating Keyboard Tray

What's Included:

Keyboard Tray, installation hardware.

How to Specify:

The articulating keyboards are available only in black.

Notes:

Keyboard trays provide adjustable ergonomic support for individuals in multi-task environments

Code	Price	H	W	D	Volume (ft³)	Weight (lb)
Articulating Keyboard Tray						
V-KASX-2510	421	0	25	10	0	15

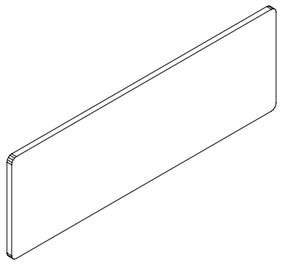

14-inch

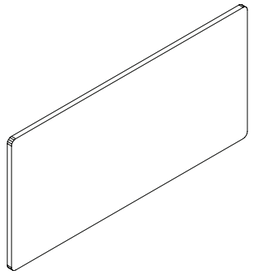

24-inch

What's Included:

Wall mounted tackboard, fasteners.

How to Specify:

Specify fabric.

Notes:

The wall mounted tackboard mounts to a wall in the workspace to provide a fabric wrapped tackable surface.

Options:

height	14, 24
width	24, 30, 36, 42, 48, 54, 60, 66, 72
screen finish	panel fabrics

Code	Price	H (in.)	W (in.)	Weight (lb)	Volume (ft³)
V-ATW0-1424-1	122	14	24	1.2	0.19
V-ATW0-1430-1	132	14	30	1.5	0.24
V-ATW0-1436-1	163	14	36	1.9	0.29
V-ATW0-1442-1	172	14	42	2.2	0.34
V-ATW0-1448-1	179	14	48	2.5	0.39
V-ATW0-1454-1	189	14	54	2.8	0.44
V-ATW0-1460-1	199	14	60	3.1	0.49
V-ATW0-1466-1	251	14	66	3.4	0.54
V-ATW0-1472-1	271	14	72	3.7	0.59
V-ATW0-1478-1	370	14	78	4	0.64
V-ATW0-1484-1	379	14	84	4.3	0.69
V-ATW0-1496-1	392	14	96	4.6	0.79
V-ATW0-2124-1	184	21	24	1.8	0.28
V-ATW0-2130-1	198	21	30	2.25	0.36
V-ATW0-2142-1	259	21	42	3.3	0.51
V-ATW0-2148-1	269	21	48	3.75	0.58
V-ATW0-2154-1	283	21	54	4.2	0.66
V-ATW0-2160-1	297	21	60	4.65	0.73
V-ATW0-2166-1	374	21	66	5.1	0.81
V-ATW0-2172-1	405	21	72	5.55	0.89
V-ATW0-2178-1	555	21	78	6	0.96
V-ATW0-2184-1	571	21	84	6.45	1.03
V-ATW0-2196-1	589	21	96	7.35	1.19
V-ATW0-2424-1	208	24	24	2.05	0.32
V-ATW0-2430-1	224	24	30	2.56	0.41
V-ATW0-2436-1	278	24	36	3.25	0.5
V-ATW0-2442-1	294	24	42	3.76	0.58
V-ATW0-2448-1	303	24	48	4.28	0.67
V-ATW0-2454-1	321	24	54	4.79	0.75
V-ATW0-2460-1	338	24	60	5.3	0.84
V-ATW0-2466-1	424	24	66	5.81	0.92
V-ATW0-2472-1	460	24	72	6.33	1.01
V-ATW0-2478-1	629	24	78	6.84	1.09
V-ATW0-2484-1	645	24	84	7.35	1.18
V-ATW0-2490-1	657	24	90	7.87	1.27
V-ATW0-2496-1	668	24	96	8.38	1.35

Code	Price	H (in.)	W (in.)	Weight (lb)	Volume (ft³)
V-ATW0-1424-2	156	14	24	1.2	0.19
V-ATW0-1430-2	165	14	30	1.5	0.24
V-ATW0-1436-2	230	14	36	1.9	0.29
V-ATW0-1442-2	240	14	42	2.2	0.34
V-ATW0-1448-2	245	14	48	2.5	0.39
V-ATW0-1454-2	256	14	54	2.8	0.44
V-ATW0-1460-2	265	14	60	3.1	0.49
V-ATW0-1466-2	350	14	66	3.4	0.54
V-ATW0-1472-2	372	14	72	3.7	0.59
V-ATW0-1478-2	471	14	78	4	0.64
V-ATW0-1484-2	480	14	84	4.3	0.69
V-ATW0-1490-2	486	14	90	4.6	0.74
V-ATW0-1496-2	527	14	96	4.9	0.79
V-ATW0-2124-2	217	21	24	1.8	0.28
V-ATW0-2130-2	230	21	30	2.25	0.36
V-ATW0-2136-2	312	21	36	2.85	0.43
V-ATW0-2142-2	327	21	42	3.3	0.51
V-ATW0-2148-2	335	21	48	3.75	0.58
V-ATW0-2154-2	351	21	54	4.2	0.66
V-ATW0-2160-2	365	21	60	4.65	0.73
V-ATW0-2166-2	474	21	66	5.1	0.81
V-ATW0-2172-2	507	21	72	5.55	0.89
V-ATW0-2178-2	656	21	78	6	0.96
V-ATW0-2184-2	670	21	84	6.45	1.03
V-ATW0-2190-2	680	21	90	6.9	1.11
V-ATW0-2196-2	723	21	96	7.35	1.19
V-ATW0-2424-2	241	24	24	2.05	0.32
V-ATW0-2430-2	257	24	30	2.56	0.41
V-ATW0-2436-2	345	24	36	3.25	0.5
V-ATW0-2442-2	362	24	42	3.76	0.58
V-ATW0-2448-2	370	24	48	4.28	0.67
V-ATW0-2454-2	389	24	54	4.79	0.75
V-ATW0-2460-2	404	24	60	5.3	0.84
V-ATW0-2466-2	524	24	66	5.81	0.92
V-ATW0-2472-2	560	24	72	6.33	1.01
V-ATW0-2478-2	728	24	78	6.84	1.09
V-ATW0-2484-2	745	24	84	7.35	1.18
V-ATW0-2490-2	758	24	90	7.87	1.27
V-ATW0-2496-2	802	24	96	8.38	1.35

Code	Price	H (in.)	W (in.)	Weight (lb)	Volume (ft³)
V-ATW0-1424-3	189	14	24	1.2	0.19
V-ATW0-1430-3	199	14	30	1.5	0.24
V-ATW0-1436-3	297	14	36	1.9	0.29
V-ATW0-1442-3	307	14	42	2.2	0.34
V-ATW0-1448-3	312	14	48	2.5	0.39
V-ATW0-1454-3	324	14	54	2.8	0.44
V-ATW0-1460-3	332	14	60	3.1	0.49
V-ATW0-1466-3	450	14	66	3.4	0.54
V-ATW0-1472-3	472	14	72	3.7	0.59
V-ATW0-1478-3	572	14	78	4	0.64
V-ATW0-1484-3	580	14	84	4.3	0.69
V-ATW0-1490-3	587	14	90	4.6	0.74
V-ATW0-1496-3	594	14	96	4.9	0.79
V-ATW0-2124-3	252	21	24	1.8	0.28
V-ATW0-2130-3	264	21	30	2.25	0.36
V-ATW0-2136-3	379	21	36	2.85	0.43
V-ATW0-2142-3	393	21	42	3.3	0.51
V-ATW0-2148-3	402	21	48	3.75	0.58
V-ATW0-2154-3	418	21	54	4.2	0.66
V-ATW0-2160-3	431	21	60	4.65	0.73
V-ATW0-2166-3	575	21	66	5.1	0.81
V-ATW0-2172-3	607	21	72	5.55	0.89
V-ATW0-2178-3	756	21	78	6	0.96
V-ATW0-2184-3	771	21	84	6.45	1.03
V-ATW0-2190-3	780	21	90	6.9	1.11
V-ATW0-2196-3	791	21	96	7.35	1.19
V-ATW0-2424-3	276	24	24	2.05	0.32
V-ATW0-2430-3	292	24	30	2.56	0.41
V-ATW0-2436-3	412	24	36	3.25	0.5
V-ATW0-2442-3	427	24	42	3.76	0.58
V-ATW0-2448-3	438	24	48	4.28	0.67
V-ATW0-2454-3	456	24	54	4.79	0.75
V-ATW0-2460-3	472	24	60	5.3	0.84
V-ATW0-2466-3	625	24	66	5.81	0.92
V-ATW0-2472-3	660	24	72	6.33	1.01
V-ATW0-2478-3	830	24	78	6.84	1.09
V-ATW0-2484-3	845	24	84	7.35	1.18
V-ATW0-2490-3	857	24	90	7.87	1.27
V-ATW0-2496-3	868	24	96	8.38	1.35

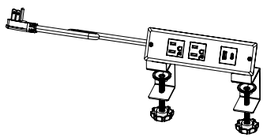

clamp mount desktop power module equipped with two ac outlets, one USB A and one USB C charging ports, and one (1) three prong cord

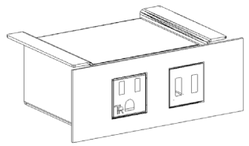

Side Mounted, 1 Outlet + Dual USB Ports

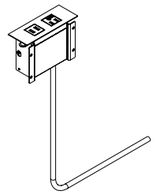

Side Mounted Module With Power And USB

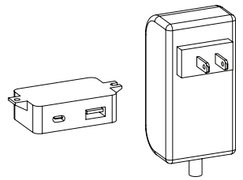

Side Mounted USB A & C, 1 Module, with AC Adapter

Code	Price	H	W	D	Volume	Weight
clamp mount desktop power module (2 AC outlets and 1 ea USB A & C ports)						
V-EMW-2AC	191	6	4	3	1	0.04
USB adapter (1 ea USB A & C ports with adapter)						
V-ESMU-A	187				2	2
side Mounted USB, 4 Module, With Hub						
V-ESMU-K	1040				2	2
side Mounted Module With Power And USB						
V-ESMU-P	272				2	2

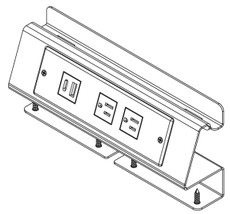

Power Ridge Module

What's Included:

Ridge Power Module with metal bracket

How to Specify:

The metal bracket is avaiable in all metal colors. Please refer to metal paint card. Also specify for power module color Black or White.

Notes:

The mountable power module avoids the visual mess of undersurface clamps.

Includes unique wire routing to clean up back of worksurface.

Includes upper ledge to accommodate cell phones and tablets.

Code	Price	H	W
V-ERPM	398	4	10

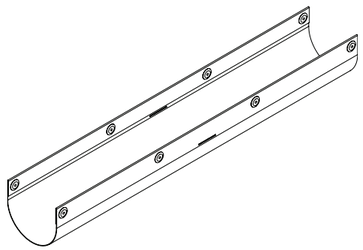

Flex Cable Organizer

What's Included:

Flex Cable organizer

How to Specify:

This accessory is available in grey only.

Notes:

Designed to fit the Volley height adjustable table frame.

Attaches to frame using magnets. Can also be attached to underside of worksurface using screws.

Height under worksurface is 5" after installation.

Made from flexible woven seam welded plastic.

Includes 2" opening midway on both sides for cable access

Options:

Depth 10"

Code	Price	W (in)	D (in)
V-EWMM-3610	97	36	10

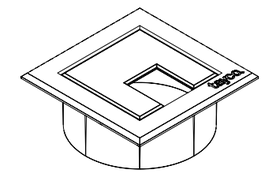

square grommet cover

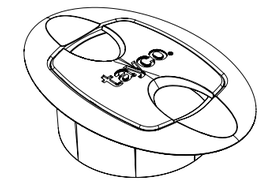

oval grommet cover

Notes:

Square Grommet covers available in black, silver and white.

Oval Grommet covers available in black and silver

Code	Price	H	W	D	Color	Weight (lb)
square grommet covers						
8540-1132	22	1.25	3.13	3.13	black	0.44
8540-1133	22	1.25	3.13	3.13	white	0.44
8540-1134	22	1.25	3.13	3.13	silver	0.44
oval grommet covers						
8540-0790	22	1.13	3	4.75	black	0.44
8540-0791	22	1.13	3	4.75	silver	0.44

Code	Price	H	W	D	Volume (ft³)	Weight (lb)
lock and key						
GEN-LOCK-CORE-KEY	21					